Ruhstrat
power technology

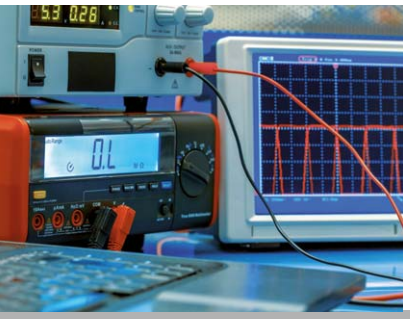


OLIVER – ONLINE VOLTAGE REGULATION
NOVEL PROTECTION AGAINST INSTABLE MAINS SUPPLY

Causes for voltage-dips/sag in mains supply

- Short circuiting in mains supply
- Lightening
- High loading and strong power changes
- Energy supplier's adjustments
- Start/Closure of nuclear plants
- Instable energy sources (wind and solar parks)
- Birds and their debris

Direct results

- Energy supplier's service pult reacts (usually within 100 – 150 ms)
- Local processes spread out in the wide supply network
- Protection and relays fail
- Sensors measure false values
- Operation of frequency converters fail

Consequences

- Production process come to a halt
- Damaging of production quality criteria
- Economic damages

CONTENTS

GridClass® Technology

PROTECTION AGAINST OVER AND UNDER LOADING UP TO ± 40 %

Voltage fluctuation in mains power supply nets are increasing and present an increasing danger for industrial production processes. Even breaks lasting only 20 ms can cause significant production failures.

Ruhstrat, a specialist for voltage optimization equipment, offers a novel system which reduces voltage-dips/sag. OLIVER (Online Voltage Regulation) protects against voltage over and/or under ± 40 %.

The German mains power supply nets are considered to be very stable. Statistics regarding breaks and availability show that lengthy interruptions and larger fluctuations of voltage occur seldom. The problem: Short breaks under 3 seconds are not covered in the statistics.

Risks are Underestimated

The energy supplier can rely on the compliance of the standard EN 50 160, which defines that voltage difference of ± 10 % UN is only required as a 10-minute middle value. Short voltage-dips/sag › 10 % are not negatively rated although they endanger industrial processes.

Negative Consequences of Voltage Fluctuations

"VIK, Association of Industrial Energy and Nuclear Plants" reported in 2012 that 72 % of all energy fluctuations last less than one second. They are caused by short-circuiting in mains supply, lightening, start/closure of nuclear plants or by instable energy sources such as wind and solar parks. According to a study undertaken by IHK Bayern (Chamber of Industry and Commerce), companies reported an increase in operation disturbances due to the fact that new equipment is effected more often than older equipment, caused often through higher sensitivity of the control systems.

Increase of Voltage-dips/sag through Regenerative Energy Sources

With the increasing number of regenerative energy sources, energy dips/sag, fluctuations and frequency deviations also increase. This instable voltage supply can endanger the security of industrial processes, e.g. sensitive electronic control equipment also react negatively to short voltage-dips/sag – even those with a duration of 10th of a second – resulting in dysfunction or production breaks. Voltage-dips/sag can also lead to unwanted power fluctuation, causing serious negative affects to the product quality and/or equipment life-span.

VOLTAGE-DIPS/SAG ENDANGER MACHINES AND EQUIPMENT

As a rule of thumb, the more modern the equipment is and the more electronics is required, the more serious are the problems caused through voltage-dips/sag. With a residual voltage less than 85 % of mains supply voltage and using frequency conversion and circuit pult parts, one can expect extreme problems (see IEC 61000 2-8). Standard protection methods convert to an undefined condition at a residual voltage of less than 80 %, even then when the dip/sag lasts only 20 ms. Even with robust users such as asynchronous motors, breaks result when the voltage sinks under 75 % of the rated voltage.

Till now, the protection concepts against voltage fluctuation could not meet the demands. Either they reacted too slowly or they were too expensive.

Ruhstrat's OLIVER (Online Voltage Regulation) presents a novel voltage regulation for the security of industrial equipment.

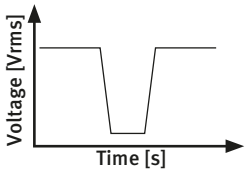

Relevance

Depending on branch and technology, the type and amount of the expenses caused by voltage-dips/sag vary:

- Additional costs for rectification works
- Costs for re-setting or re-starting machines
- Stand-still costs caused by lengthy production breaks
- Logistic problems in extremely synchronized processes
- Maintenance and repair costs caused by damages

According to an economical study, the costs per dip/sag vary from a few thousand EUROS in simple production to six-figure sums in very sensitive production areas, such as semi-conductors or the pharmaceutical industry.

Especially prone to danger are generally all high-technical production lines and almost all processes, where the moment-of-force and motor engine speed must be held stable simultaneously.

ONLINE VOLTAGE REGULATION (OLIVER) – REAL-TIME REACTION (‹ 1 MS)

Examples

- Pharmaceutical industry (prevention of temperature fluctuation)
- Coating procedure (voltage-dips/sag directly affect the coating thickness, control problems)
- Grinding procedure (voltage fluctuation affects product quality)
- Measurement technique (very precise processes which require a stable net, e.g. ABS system testing)
- Medical technique (nuclear spin tomography, intra-cardiac catheter, etc.)
- Large industrial equipment
- Highly dynamic processes

OLIVER ensures for a novel protection against instable mains supply due to the voltage optimization acting as an on-line system. It corrects voltage deviations in real time (‹ 1 ms) and can be better integrated in the industrial surrounding as, for example, USV equipment. Contrary to USV equipment, the mains supply short-circuit withstanding capacity stays almost constant and available protection measurements such as safety devises or power switches can continue operations.

Requirements of Voltage Regulator

Users of machines and equipment have high demands on voltage supply quality:

- High provision security
- Low investment costs
- Effective energy usage (low losses)
- Low maintenance costs
- High mains supply short-circuit withstanding
  - to ensure good net quality
  - to ensure the flawless function of protection measurements, e.g. safety devises and power switches (selectivity)
  - reserves for the flawless start of motors, overload and dynamic processes

HIGH EFFICIENCY – LOW COSTS

OLIVER ensures a revolutionary new protection against instable mains supply:
The voltage regulator operates as an online system. OLIVER is installed between the load and power supply and ensures that sensible loads are protected. A transformer developed by Ruhstrat (Uk ≤ 2 %) ensures that the short-circuit power remains unchanged and that existing protection elements, such as fuses circuit breakers, function without having to be replaced or making changes to the settings.

Effective Mains Security

- Real-time voltage correction (‹ 1 ms)
- Short-circuit power is sustained
- Voltage-dips/sag can be corrected up to 40 % UN
- Efficiency › 98 %
- Robust over-load capacity 150 % for approx. 30 seconds, 200 % in bypass operation
- Modular expansion possible
- Low operating and maintenance costs
- Protection against over-voltage

Reliable compensation of 400 V voltage fluctuations

OLIVER corrects voltage fluctuations in real-time and continuously holds the mains voltage at the desired value. The system reacts to voltage fluctuations within 140 µs and regulates the voltage within less than 10 ms back to the desired value.

Protection against short-term and long-term voltage-dips and sag

OLIVER provides interference-free voltage. Voltage-dips/sag are buffered and voltage increases are absorbed. Not only are short-term dips/sag compensated but a continuous stabilization of voltage deviations is ensured.

- Compensation of voltage-dips/sag (up to 30 s) of ± 40 %
- Compensation of long term voltage deviations up to ± 10 %

On inquiry, Ruhstrat can analyze the actual mains quality and, using data taken over weeks, can determine the severity of the voltage fluctuation.

Scope of performance:

Problem on the grid	Input	Output	Regulation time
Correction of three-phase voltage-dips/sag	60% Remain Voltage 50% Remain Voltage 40% Remain Voltage	100% 90% 75%	30 Seconds 20 Seconds 10 Seconds
Correction of one-phase voltage-dips/sag	45% Remain Voltage 0% Remain Voltage	100% 55%	30 Seconds 10 Seconds
Correction of single-phase voltage spikes	115% Main Voltage	100%	Durable
Three-phase undervoltage at rated Power	up to 90% Main Voltage	100%	Durable
Three-phase overvoltage at rated Power	up to 110% Main Voltage	100%	Durable

COMPACT – WITHOUT ENERGY STORAGE AND WITHOUT AIR CONDITIONING

OLIVER is encased in a cabinet, consists of elements such as rectifier, converters and a bypass module, requires neither energy storage nor air conditioning and is almost maintenance free.

Effective Climate Concept

- OLIVER requires minimal spacing
- Usage next to production equipment is possible
- An effective air circulation system ensures maintenance-free usage up to 40 °C.

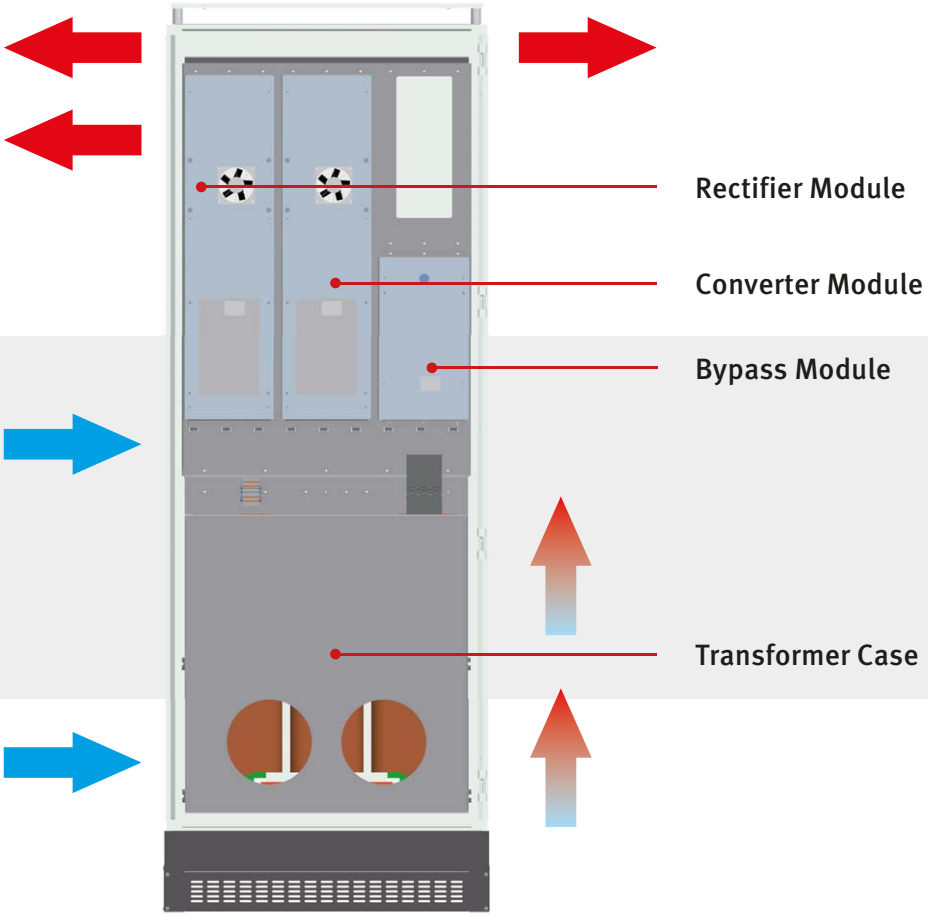

Climate concept and structure of OLIVER cabinet system

SAFE OPERATION AND EASY INTEGRATION

Keeping the impedances low – Keeping the short circuits currents high

One of the essential quality features of a mains supply is to provide a high short-circuit capacity. The higher the short circuit power – the easier it is keep selectivity criteria of fuses and circuit breakers fullfill. Motor starts are more reliable and less harmonics are added to the voltage. The injection transformer of OLIVER has a small serial impedance (about 2 %). This is hardly comparable to the installation of a UPS system that would significantly reduce short-circuit power. The customer can easily integrate OLIVER without compromising disadvantages to take.

Integrated bypass – redundant design

If a short circuit occurs it is necessary to provide sufficient power to blow fuses or to cause the circuit-breakers to trip as fast as possible and thereby to minimize the time the failure occurs.

In order to ensure this in all circumstances, OLIVER provides a multiple redundant bypass system:

- Thyristor switch (fast short-circuiting the power electronics) and
- High performance contactors (continious bypassing the power electronics)

Thanks to the integrated bypass the power electronics will be safe against overcurrents. Faults within the protected network will be cleared shortly and OLIVER will keep running without servicing. In case of very high short-circuit currents (eg automotive industry with multiple feeds or 200 V mains supply) there is an optional very high capacity bypass available.

Bypass-Module

DEVIATIONS WITH AND WITHOUT OLIVER NETWORK SECURITY / FUNCTION PRINCIPLES

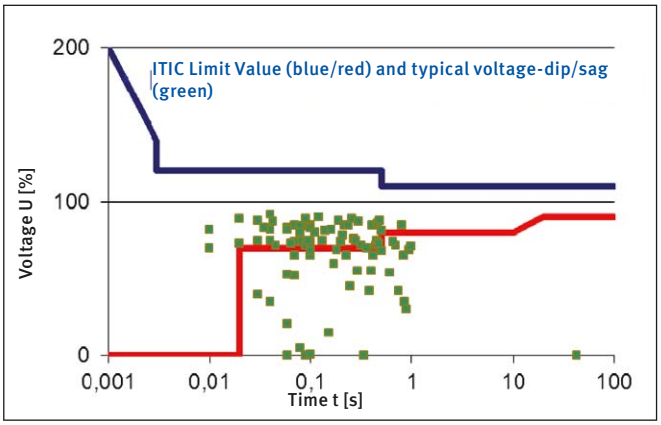

Interference ratio without OLIVER

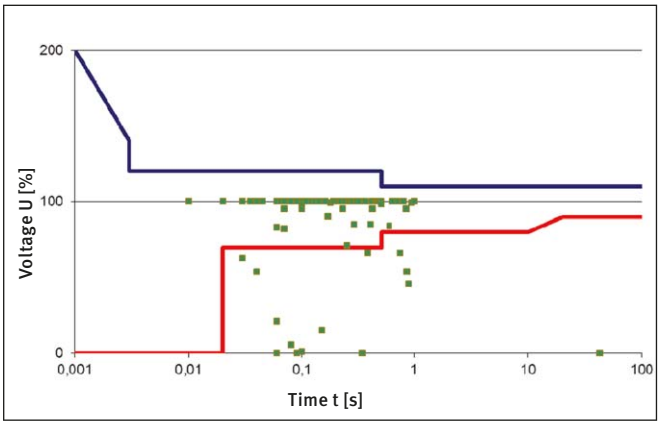

Interference ratio with OLIVER

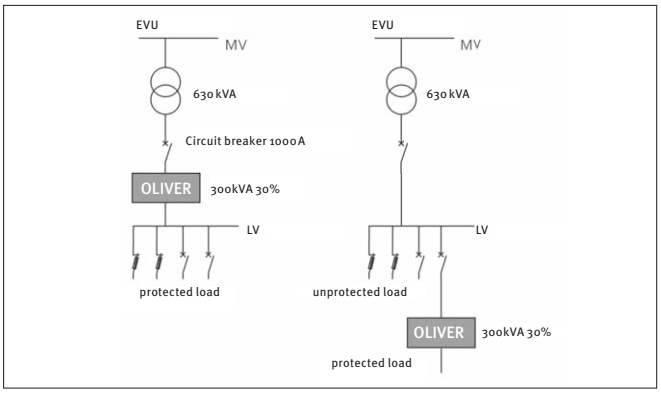

Main security with OLIVER

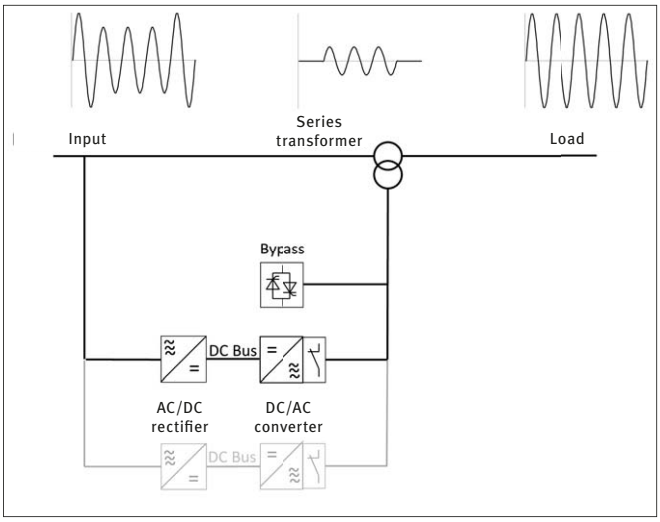

OLIVER principle of function

Advantages

- OLIVER maybe integrated easily in customers power distribution
- Can be integrated after mains-transformer or inline with dedicated load
- Voltage sags and swells will be reduced significantly and immunity will be improved
- The functional principle provides high reliability and efficiency

CORRECTION RANGE AND DURATION

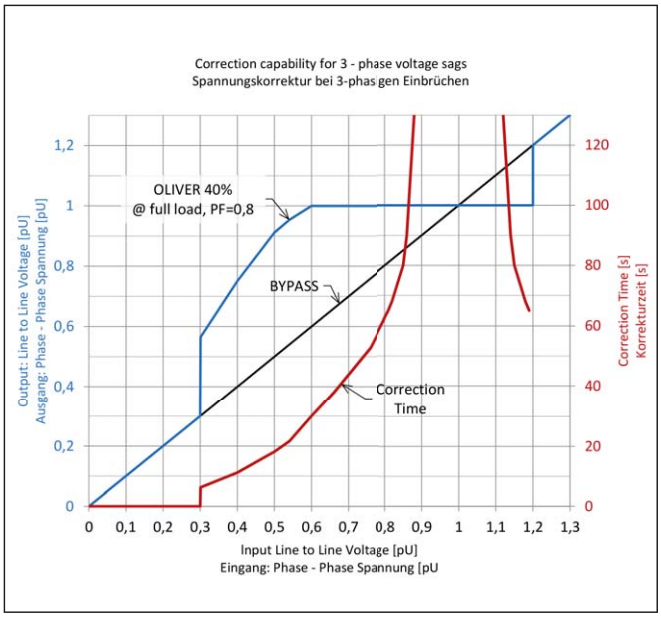

Correction values for 3-phase voltage-dips/sag

OLIVER protects your equipment within input voltage ranges from 30 % .. 120 % of the nominal voltage. The depicted diagramme shows the correction range and the duration for 3-phase voltage deviations.

How to read – Example for Input voltage of 60 % of nominal voltage (sag of 40 %)

Output voltage:
The blue diagramme is read on the left axis.
Starting at input voltage 0.6 going vertical the blue diagramme will be intersected at 1.0
The output voltage will be totally corrected.

Duration:
The red diagramme is read on the right axis.
Starting at input voltage 0.6 going vertical the blue diagramme will be intersected at 0.6
At nominal load the sag will be be corrected to a maxiumum duration of 30 s.

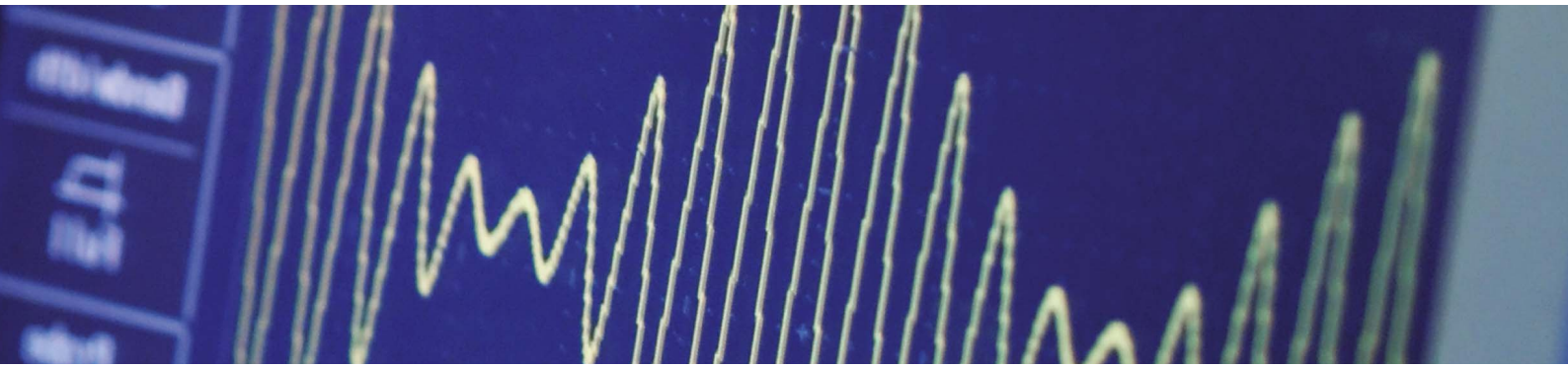

TECHNICAL DATA

	OLIVER 300 OVR300-400-40	OLIVER 600 OVR600-400-40
Nominal Power (Higher performance available on request)	300 kVA	600 kVA
Correction Voltage-dips/sag	40%	40%
Rated Voltage	200 ... 480V	200 ... 480V
Frequency	50/60 Hz	50/60 Hz
Grid	3-phase, TN-C / TN-S	3-phase, TN-C / TN-S
Short circuit power	scalable	scalable
Correction Power	±10% Durable	±10% Durable
Regulation accuracy at output voltage	≤ ± 1%	≤ ± 1%
Regulation accuracy by output dips/sag	± 3%	± 3%
Reaction time	140 µs	140 µs
Regulation time	‹ 10ms	‹ 10ms
Overload	150% I_N (30S)	150% I_N (30S)
Overload in bypass operation	20kA / 150ms 40kA / 10ms"	20kA / 150ms 40kA / 10ms"
1-phase Dips/sag	45% U_N -100% (30s) 0% U_N -55% (10 s)	45% U_N -100% (30s) 0% U_N -55% (10 s)
3-phase Dips/sag	60% U_N - 100% (30s) 50% U_N - 90% (20s) 40% U_N -75% (10 s)	60% U_N - 100% (30s) 50% U_N - 90% (20s) 40% U_N -75% (10 s)
Efficiency	› 98% (typical 99%)	› 98% (typical 99%)
Operation mode	S1	S1
Display	5,7"- HMI Touch Panel	5,7"- HMI Touch Panel
Communication	Ethernet / MODBUS TCP	Ethernet / MODBUS TCP
Configuration / Analysis	WEB-Interface / Mail SD-Card Logger	WEB-Interface / Mail SD-Card Logger
Power electronic	GridClass Technology ®	GridClass Technology ®
Cooling	AF	AF
Overvoltage protection (option)	DV M TNC, Surge arrester Typ II	DV M TNC, Surge arrester Typ II
Degree of protection [IEC 60529]	IP20 / Optional IP54	IP20 / Optional IP54
Noise emission (sound pressure level @ Nominal Power)	‹ 75dBA in 2m Distance ‹ 61dBA in 10m Distance	‹ 75dBA in 2m Distance ‹ 61dBA in 10m Distance
Ambient temperature	0°C ... 40°C Nominal Power 40°C ... 50°C Derating 2% pro °C	0°C ... 40°C Nominal Power 40°C ... 50°C Derating 2% pro °C
rel. air humidity	85%	85%
Installtion	‹ 1000 m Nominal Power 1000 ... 2000 m Derating 1% pro 100m	‹ 1000 m Nominal Power 1000 ... 2000 m Derating 1% pro 100m
Weight in kg	approx. 1000	approx. 1500
Dimensions [W × H × D]	800 × 2200 × 600	1600 × 2200 × 800
Cable connection	Bottom	Bottom
Color enclosure	RAL 7035	RAL 7035
Enclosure	RITTAL TS8	RITTAL TS8
Bypass (electronic + electronic mechanical)	Standard features	Standard features
Service-Bypass	Option	Option
Certificates and approvals	IEC / EN 50178 IEC / EN 61000-6-4 IEC / EN 55011 CISPR11 Class A IEC / EN 61000-6-2 CE includingLVD 2014/35/EC & EMC 2014/30/EC SEMI F47-0706 (Reapproved 0812)	IEC / EN 50178 IEC / EN 61000-6-4 IEC / EN 55011 CISPR11 Class A IEC / EN 61000-6-2 CE includingLVD 2014/35/EC & EMC 2014/30/EC SEMI F47-0706 (Reapproved 0812)

OLIVER 900 **OVR900-400-40**	**OLIVER 1200** **OVR1200-400-40**	**OLIVER 1500** **OVR1500-400-40**	**OLIVER 1800** **OVR1800-400-40**
900 kVA	1200 kVA	1500 kVA	1800 kVA
40%	40%	40%	40%
200 … 480V	200 … 480V	200 … 480V	200 … 480V
50/60 Hz	50/60 Hz	50/60 Hz	50/60 Hz
3-phase, TN-C / TN-S	3-phase, TN-C / TN-S	3-phase, TN-C / TN-S	3-phase, TN-C / TN-S
scalable	scalable	scalable	scalable
±10% Durable	±10% Durable	±10% Durable	±10% Durable
≤ ± 1%	≤ ± 1%	≤ ± 1%	≤ ± 1%
± 3%	± 3%	± 3%	± 3%
140 µs	140 µs	140 µs	140 µs
‹ 10ms	‹ 10ms	‹ 10ms	‹ 10ms
150% I_N (30S)	150% I_N (30S)	150% I_N (30S)	150% I_N (30S)
20kA / 150ms 40kA / 10ms"	20kA / 150ms 40kA / 10ms"	20kA / 150ms 40kA / 10ms"	20kA / 150ms 40kA / 10ms"
45% U_N -100% (30s) 0% U_N -55% (10 s)	45% U_N -100% (30s) 0% U_N -55% (10 s)	45% U_N -100% (30s) 0% U_N -55% (10 s)	45% U_N -100% (30s) 0% U_N -55% (10 s)
60% U_N - 100% (30s) 50% U_N - 90% (20s) 40% U_N -75% (10 s)	60% U_N - 100% (30s) 50% U_N - 90% (20s) 40% U_N -75% (10 s)	60% U_N - 100% (30s) 50% U_N - 90% (20s) 40% U_N -75% (10 s)	60% U_N - 100% (30s) 50% U_N - 90% (20s) 40% U_N -75% (10 s)
› 98% (typical 99%)	› 98% (typical 99%)	› 98% (typical 99%)	› 98% (typical 99%)
S1	S1	S1	S1
5,7"- HMI Touch Panel	5,7"- HMI Touch Panel	5,7"- HMI Touch Panel	5,7"- HMI Touch Panel
Ethernet / MODBUS TCP	Ethernet / MODBUS TCP	Ethernet / MODBUS TCP	Ethernet / MODBUS TCP
WEB-Interface / Mail SD-Card Logger	WEB-Interface / Mail SD-Card Logger	WEB-Interface / Mail SD-Card Logger	WEB-Interface / Mail SD-Card Logger
GridClass Technology ®	GridClass Technology ®	GridClass Technology ®	GridClass Technology ®
AF	AF	AF	AF
DV M TNC, Surge arrester Typ II	DV M TNC, Surge arrester Typ II	DV M TNC, Surge arrester Typ II	DV M TNC, Surge arrester Typ II
IP20 / Optional IP54	IP20 / Optional IP54	IP20 / Optional IP54	IP20 / Optional IP54
‹ 75dBA in 2m Distance ‹ 61dBA in 10m Distance	‹ 75dBA in 2m Distance ‹ 61dBA in 10m Distance	‹ 75dBA in 2m Distance ‹ 61dBA in 10m Distance	‹ 75dBA in 2m Distance ‹ 61dBA in 10m Distance
0°C … 40°C Nominal Power 40°C … 50°C Derating 2% pro °C	0°C … 40°C Nominal Power 40°C … 50°C Derating 2% pro °C	0°C … 40°C Nominal Power 40°C … 50°C Derating 2% pro °C	0°C … 40°C Nominal Power 40°C … 50°C Derating 2% pro °C
85%	85%	85%	85%
‹ 1000 m Nominal Power 1000 ... 2000 m Derating 1% pro 100m	‹ 1000 m Nominal Power 1000 ... 2000 m Derating 1% pro 100m	‹ 1000 m Nominal Power 1000 ... 2000 m Derating 1% pro 100m	‹ 1000 m Nominal Power 1000 ... 2000 m Derating 1% pro 100m
approx. 2000	approx. 3000	approx. 3500	approx. 4000
2000 × 2200 × 800	2800 × 2200 × 800 opt. 1600 × 2200 × 2000	2800 × 2200 × 800 opt. 1600 × 2200 × 2000	2800 × 2200 × 800 opt. 1600 × 2200 × 2000
Bottom	Bottom	Bottom	Bottom
RAL 7035	RAL 7035	RAL 7035	RAL 7035
RITTAL TS8	RITTAL TS8	RITTAL TS8	RITTAL TS8
Standard features	Standard features	Standard features	Standard features
Option	Option	Option	Option
IEC / EN 50178 IEC / EN 61000-6-4 IEC / EN 55011 CISPR11 Class A IEC / EN 61000-6-2 CE includingLVD 2014/35/EC & EMC 2014/30/EC SEMI F47-0706 (Reapproved 0812)	IEC / EN 50178 IEC / EN 61000-6-4 IEC / EN 55011 CISPR11 Class A IEC / EN 61000-6-2 CE includingLVD 2014/35/EC & EMC 2014/30/EC SEMI F47-0706 (Reapproved 0812)	IEC / EN 50178 IEC / EN 61000-6-4 IEC / EN 55011 CISPR11 Class A IEC / EN 61000-6-2 CE includingLVD 2014/35/EC & EMC 2014/30/EC SEMI F47-0706 (Reapproved 0812)	IEC / EN 50178 IEC / EN 61000-6-4 IEC / EN 55011 CISPR11 Class A IEC / EN 61000-6-2 CE includingLVD 2014/35/EC & EMC 2014/30/EC SEMI F47-0706 (Reapproved 0812)

TESTED VALUES – AN ALMOST PERFECT VOLTAGE CURVE

OLIVER's successful voltage regulation concept has proven itself in the practice. The test results confirm dependable protection against short and permanent voltage-dips/sag.

The graphic shows OLIVER's correction values for 3-phase voltage-dips/sag. The system achieves an almost perfect voltage contour. The results of regulated output voltage show a mere difference of approx. 0,625 % of the nominal value (at loading).

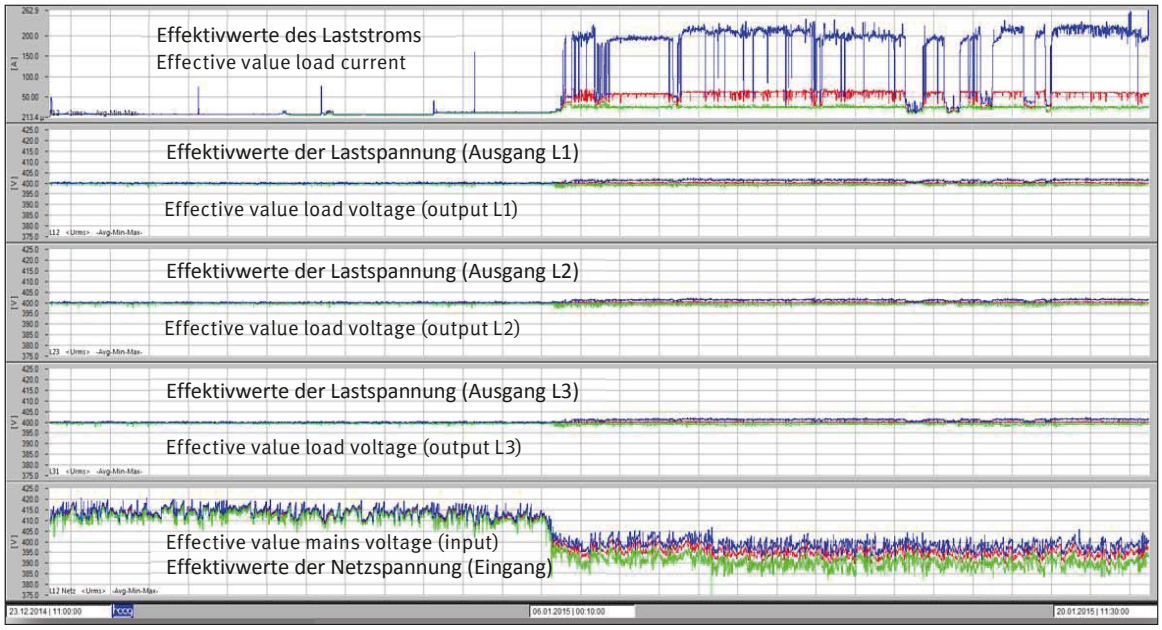

Recording of load current as well as output and input voltage. The red line shows the 10 minute mid-vale, the blue line the maximum peak value and the green line the minimal peak value.

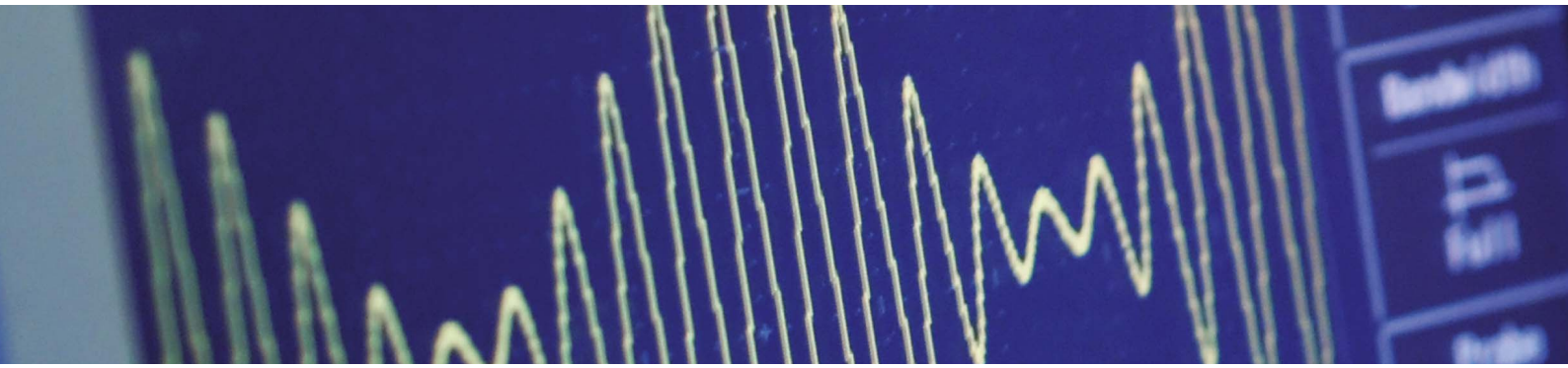

THIS IS RUHSTRAT

When the brothers Adolf and Ernst Ruhstrat opened their small electrical shop in 1888 in Göttingen, our company's success story was still unwritten.

Today Ruhstrat Power Technology (RPT) designs and produces electrical testing solutions, voltage optimizers and transformers. In the electrical testing field, RPT specializes in testing facilities for temperature rise, motors and pumps as well as testing systems for high voltage cables (heat cycle tests).

In the area of voltage optimization, RPT relies on over 80 years of experience to offer modern equipment to protect against voltage dips and ensure voltage stabilization. RPT's transformer production for low and middle voltage with control cabinets guarantee a continuous high quality of all electrical elements.

The expert knowledge about the technology of electrical testing solutions, voltage optimizers, transformers and systems with control cabinets, control and PLC, makes us a strong and innovative partner to our customers,

You wish for more information regarding Ruhstrat and our products? Just visit our website: ***www.ruhstrat.com***

You have questions regarding OLIVER – Online Voltage Regulation and/or you require an offer? Under the link **http://tinyurl.com/oliver-contact** you will find various means to contact us. It goes even quicker by scanning our QR-code (shown on the left side) using your smartphone or tablet.

Our sales team will be most pleased to consult you regarding all questions to our products.

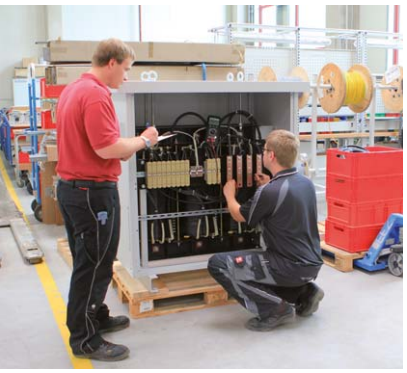

Ruhstrat Power Technology GmbH
Heinestraße 12 · 37120 Bovenden · Germany
Phone: +49 55 93 9 37 22-0 · E-Mail: info@ruhstrat.com

www.ruhstrat.com

ELT-B-001-en-0318